INTERIOR

DETAIL 7.2

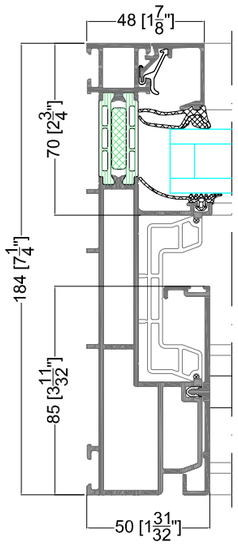

DETAIL 4

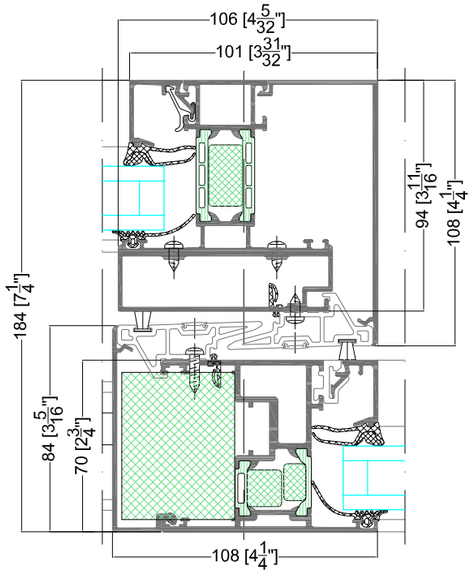

DETAIL 3.1

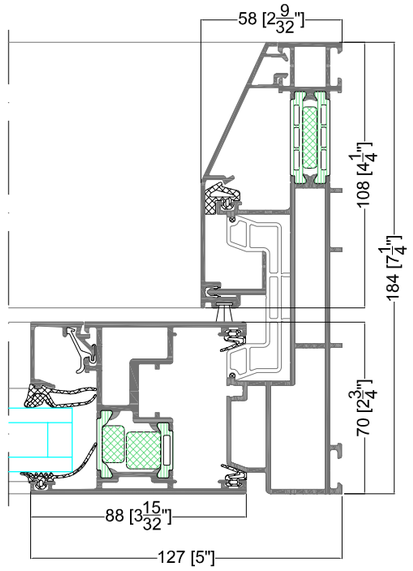

EXTERIOR

DETAIL 1.1

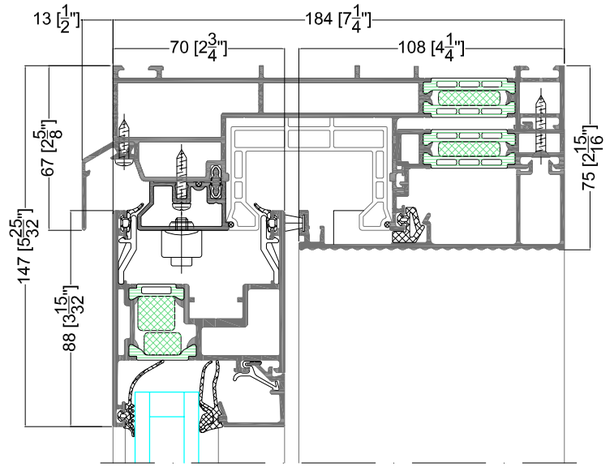

EXTERIOR

INTERIOR

DETAIL 2.1

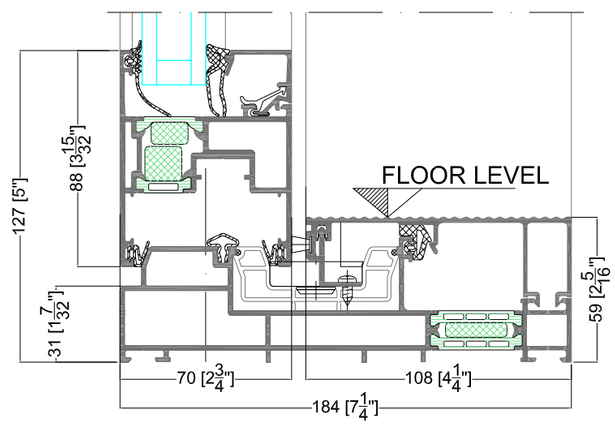

DETAIL 1.2

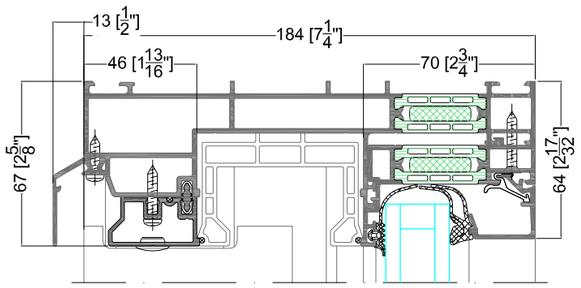

EXTERIOR

INTERIOR

DETAIL 2.2

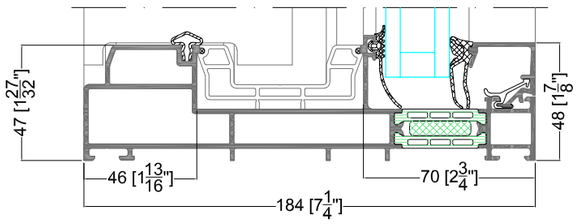

Type 1A

Type 1A with thermal insulation optimisation

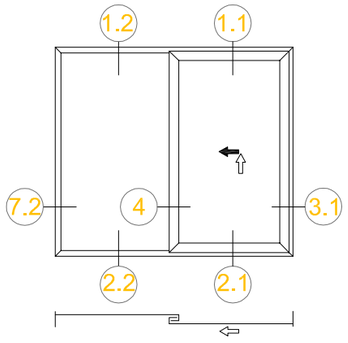

LEONARDO
STEEL & ALUMINUM

ASS 70.HI

Lift & Slide

Schüco

Type 1D

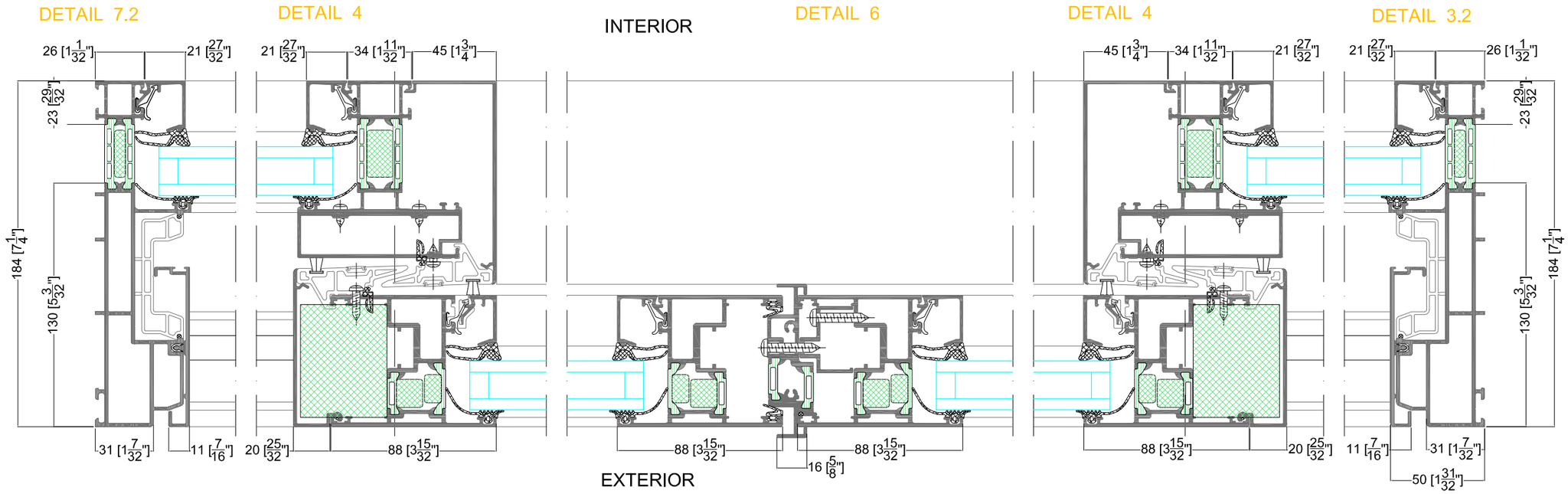

Type 1D with thermal insulation optimisation

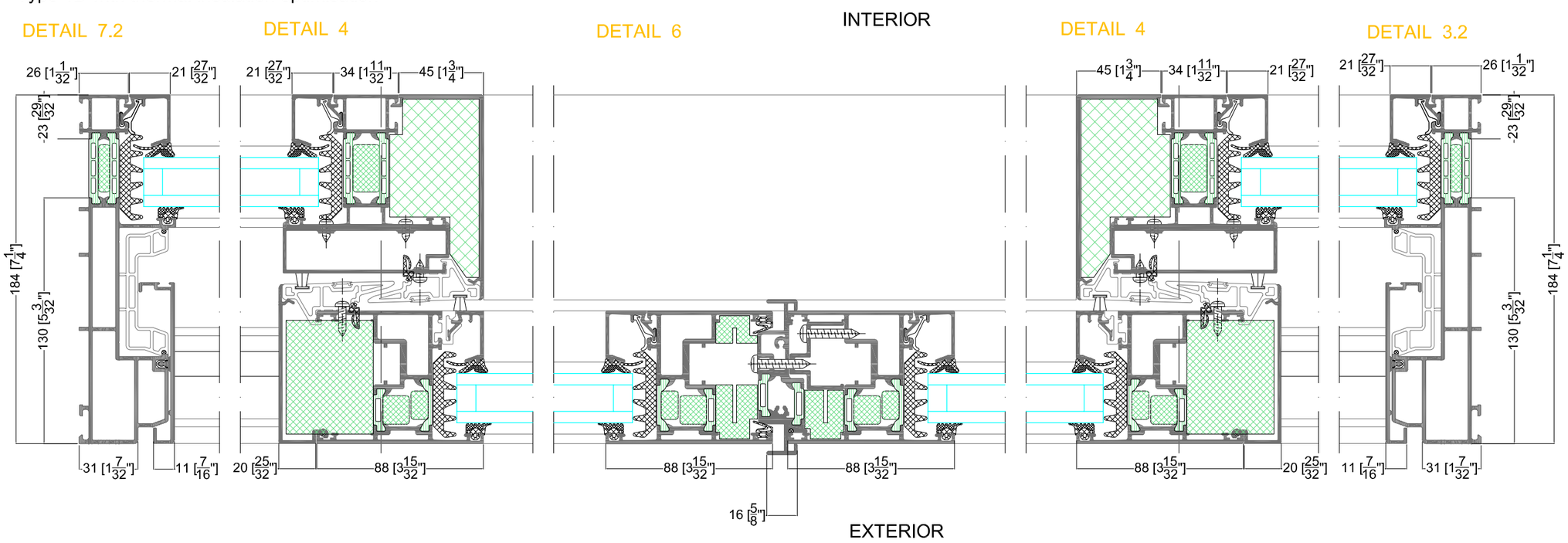

Type 1D

Type 1D with thermal insulation optimisation

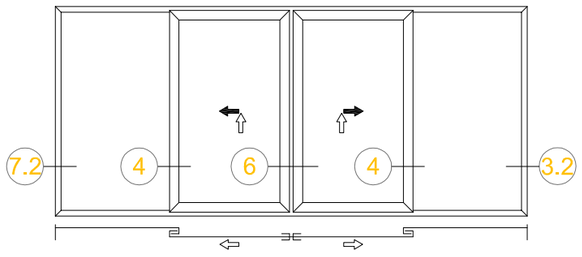

LEONARDO
STEEL & ALUMINUM

ASS 70.HI

Lift & Slide

Schüco

INTERIOR

DETAIL 7.1 DETAIL 4 DETAIL 4 DETAIL 3.3

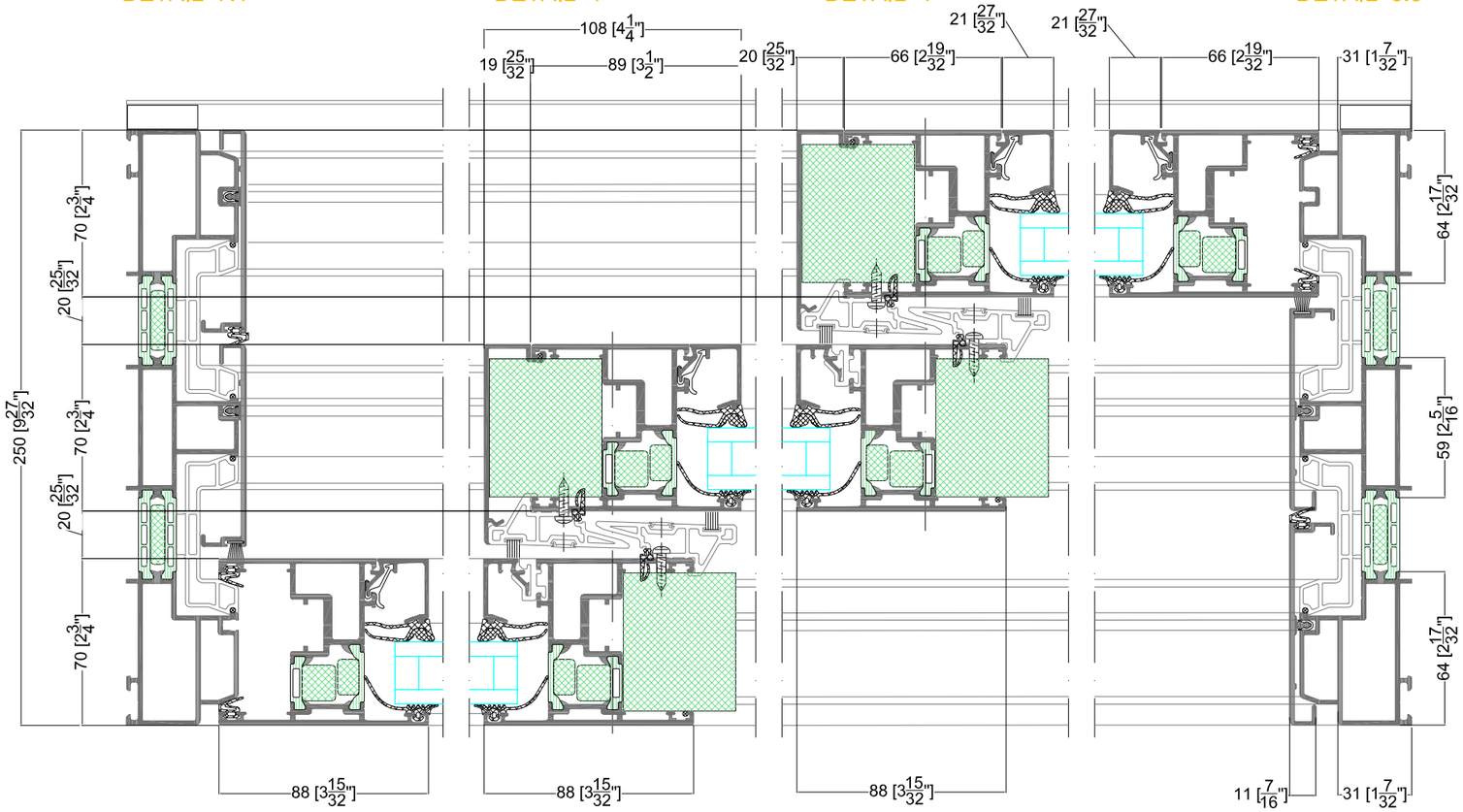

EXTERIOR

DETAIL 1.3

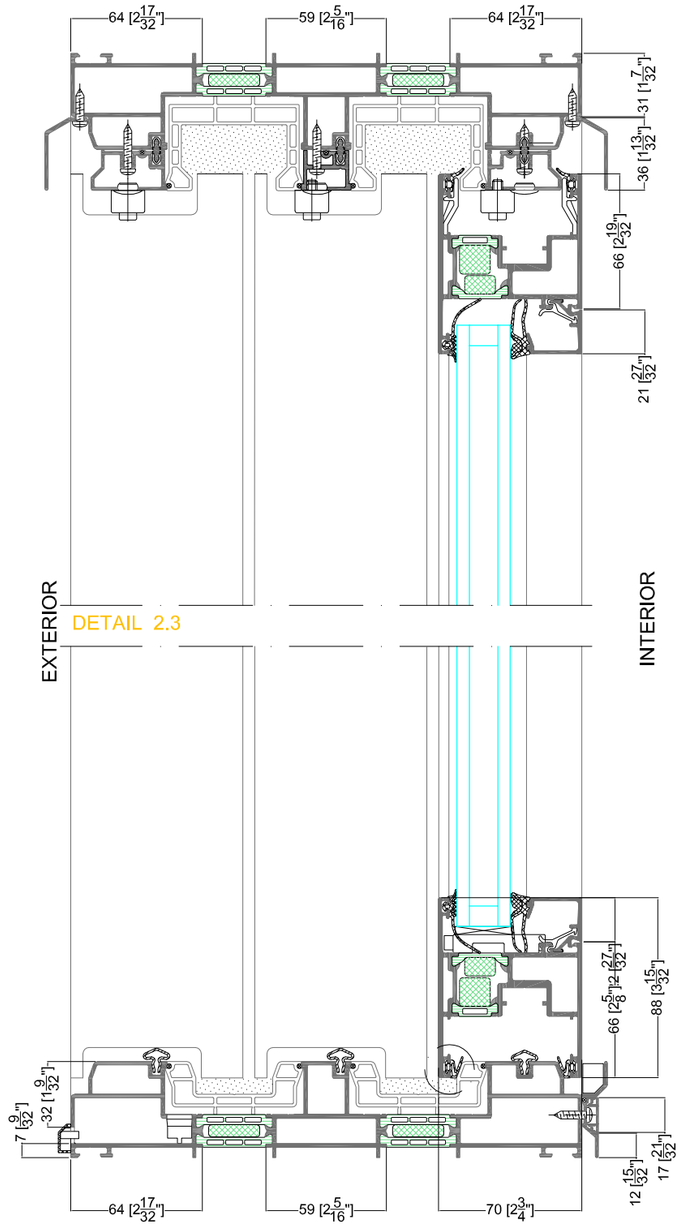

Type 3E

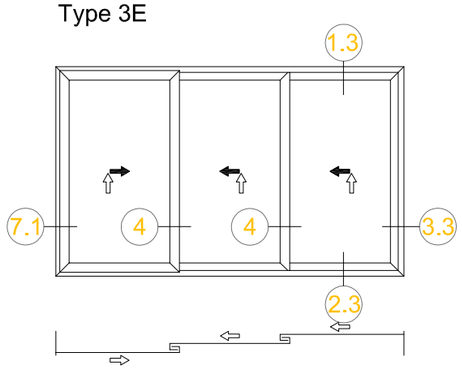

Type 3E/1

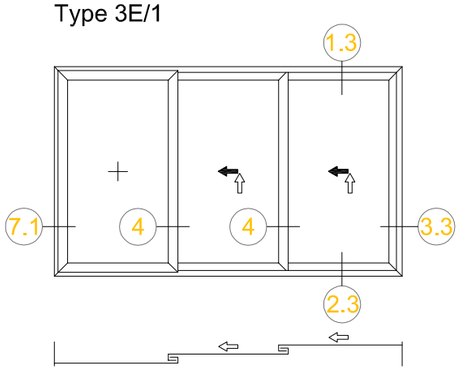

LEONARDO
STEEL & ALUMINUM

ASS 70.HI
Lift & Slide

Schüco

INTERIOR

DETAIL 7.1 DETAIL 4 DETAIL 4 DETAIL 3.3

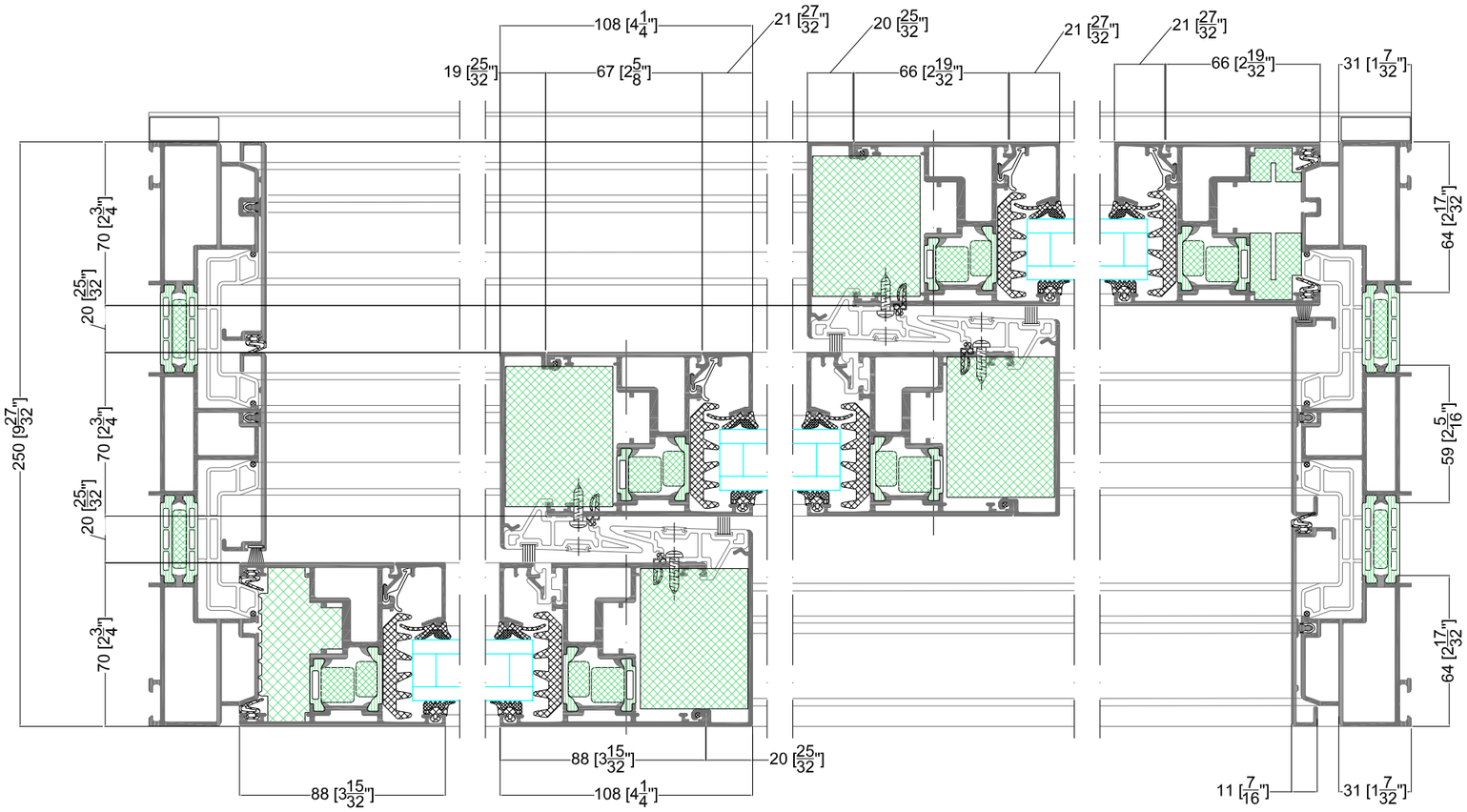

EXTERIOR

DETAIL 1.3

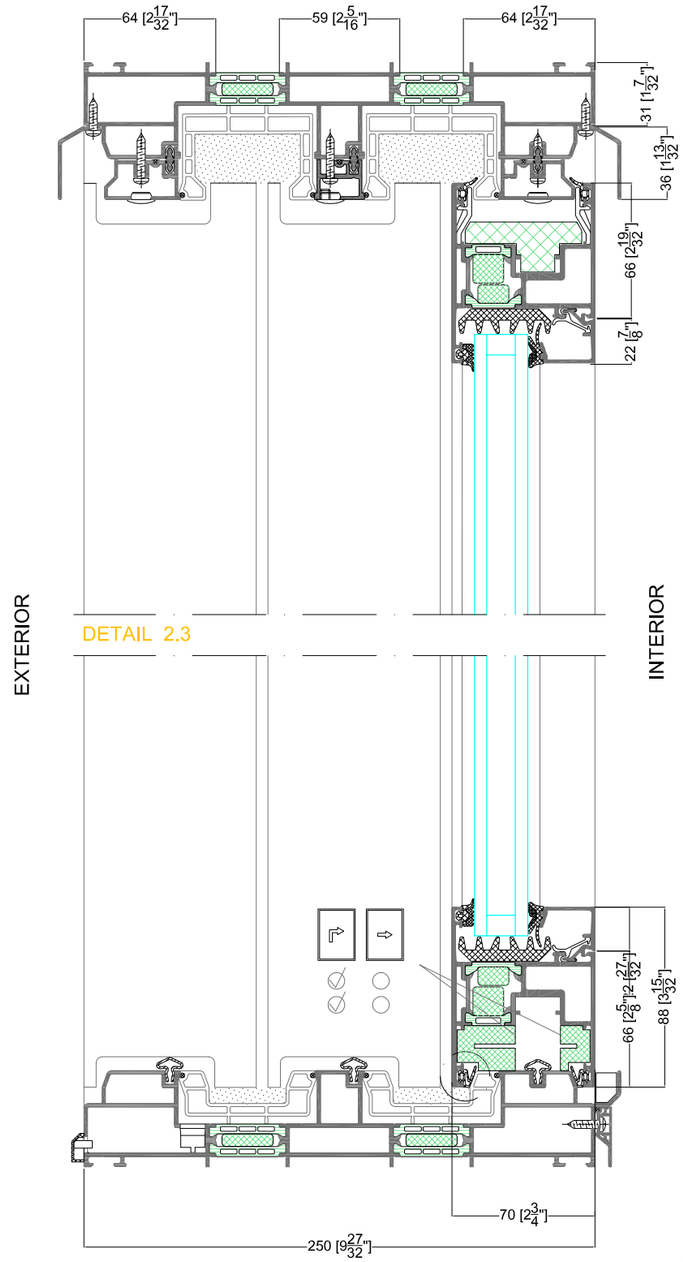

Type 3E with thermal insulation optimisation

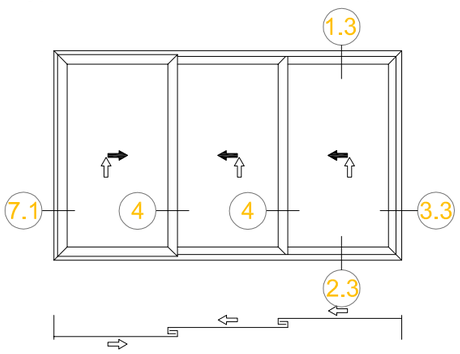

Type 3E/1 with thermal insulation optimisation

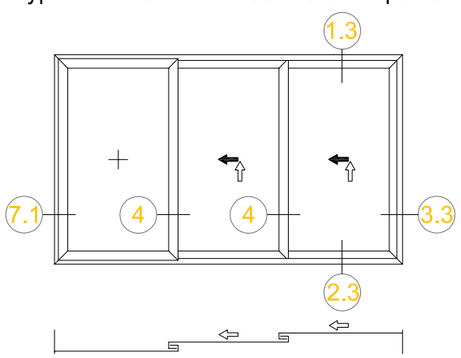

LEONARDO
STEEL & ALUMINUM

ASS 70.HI
Lift & Slide

Schüco

INTERIOR

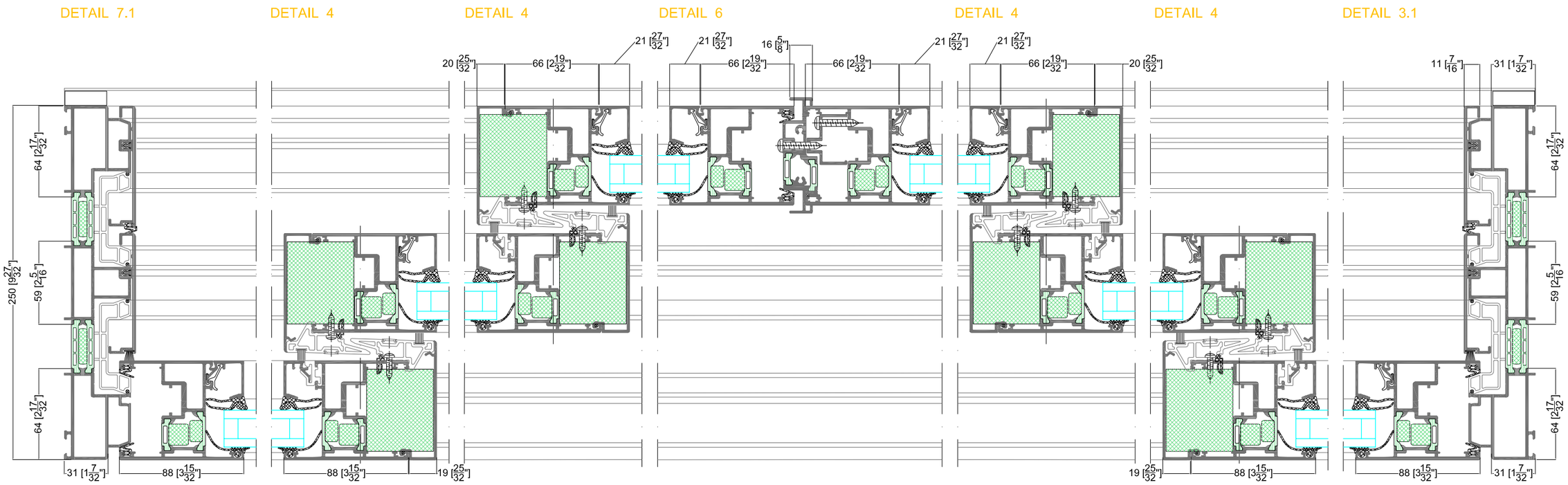

EXTERIOR

Type 3F

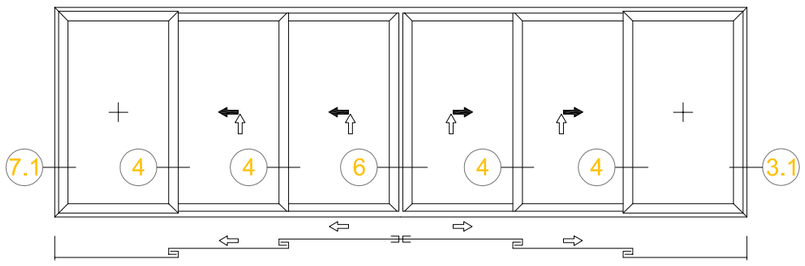

LEONARDO
STEEL & ALUMINUM

ASS 70.HI
Lift & Slide

Schüco